NanoSpeed™ 2X2 Series Fiber Optical Switch

(SM, PM, Bidirectional)

DATASHEET

BUY NOW

The NS Series 2x2 solid-state fiber optic switch connects optical channels by redirecting an incoming optical signal into a selected output optical fiber. This is achieved using patented non-mechanical configurations with unique electro-optical design, eliminating the need for mechanical movement and organic materials. The NS fiber optic switch is designed to meet the most demanding switching requirements of ultra-high reliability, fast response time, and continuous switching operation. The switch is intrinsically bidirectional and selectable for polarization-independent or polarization-maintain by the fiber type.

5V TTL signals control the NS Series switch with a specially designed electronic driver having performance optimized for various repetition rates.

The rise/fall time is intrinsically related to the crystal properties, and the repetition rate is associated with the driver. There are poor frequency response sections due to the device resonances. The NS devices are shipped mounted on a tuned driver.

The NS series switches respond to a control signal with any arbitrary timing with frequency from DC up to MHz. The switch is usually mounted on a tuned driver before shipping. The electrical power consumption is related to the repetition rate at which the switch is operated.

The dual-stage configuration increases the extinction ratio or cross-talk value.

Features

- Solid-State
- High speed
- Ultra-high reliability
- Low insertion loss
- Compact

Applications

- Optical blocking
- Configurable operation
- Instrumentation

Specifications

Parameter		Min	Typical	Max	Unit
Insertion Loss [1]	1260~1650nm		1.0	1.5	dB
	960~1260nm		1.2	1.6	dB
Cross Talk [2]		18	22	35	dB
Durability		10^{14}			cycles
PDL (SMF Switch only)			0.15	0.3	dB
ER (PMF Switch only)		18	25		dB
IL Temperature Dependency			0.25	0.5	dB
Return Loss		45	50	60	dB
Response Time (Rise, Fall)				300	ns
Fiber Type		SMF-28, Panda PM, or equivalent			
Driver Repeat Rate	100kHz driver	DC	100		kHz
	300kHz driver	DC	300		kHz
Optic power Handling [3]	Normal power		0.3	0.5	W
	High power		1	20	W
Operating Temperature		-5		70	°C
Storage Temperature		-40		85	°C

Note:

[1] Measured without connectors. For other wavelength, please contact us.

[2] ±25nm, Cross talk is measured at 100kHz, which may be degraded at the high repeat rate.

[3] Defined at 1550nm. Power handling level will be smaller at wavelength shorter than 1550nm.

Warning: **This is an OEM module designed for system integration. Do not touch the PCB by hand. The electrical static can kill the chips even without a power plug-in. Unpleasant electrical shock may also be felt. For laboratory use, please buy a Turnkey system.**

Rev 04/05/24

NanoSpeed™ 2X2 Series Fiber Optical Switch

(SM, PM, Bidirectional)

DATASHEET

Mechanical Dimensions (mm) of NSSW-2x2 w/o driver

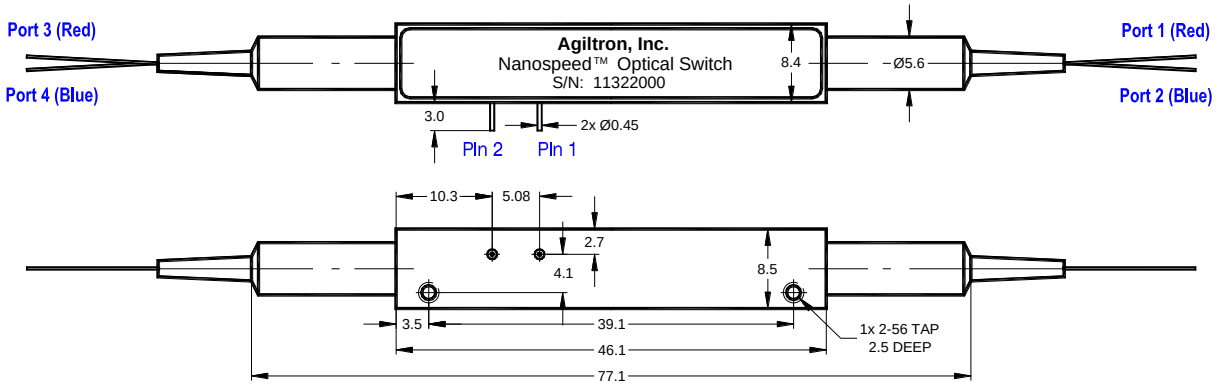

Package for power < = 2W

Package YBD for power > 2W

*Product dimensions may change without notice. This is sometimes required for non-standard specifications.

Optical Path Driving Table

Optical Path	TTL with Driver	Direct Driving	
Port 1 → Port 3, Port 2 → Port 4	L (< 0.8V)	0V on PIN 1	0V on PIN 2
Port 1 → Port 4, Port 2 → Port 3	H (> 3.5V)	HV on PIN 1	
HV: 360 ~420V			

Driving Board Selection

Maximum Repetition Rate	Part Number (P/N)
100 kHz	NSSW100ns100kHzD
300 kHz	NSSW100ns300kHzD

* Note: For customers that prefer to design their own driving circuit, they are responsible for the optical performance. For more technical information, please contact us.

NanoSpeed™ 2X2 Series Fiber Optical Switch

(SM, PM, Bidirectional)

DATASHEET

100kHz Driver Mechanical Drawing (mm)

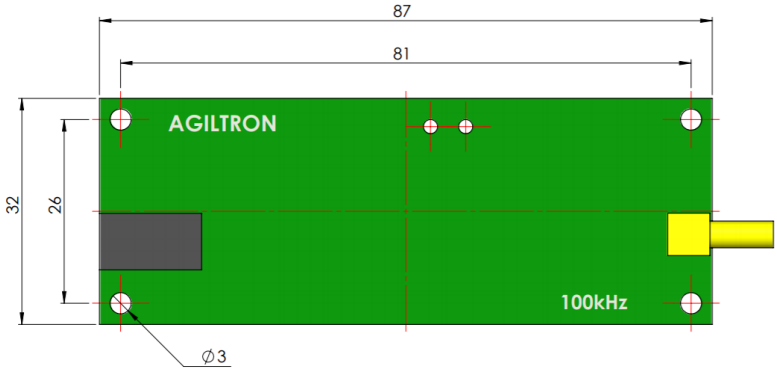

NOTE: When ordered with 100kHz driver, NSSW-2x2 will be mounted on this driver by soldering PINs on the PCB.

300kHz Driver Mechanical Drawing (mm)

NOTE: When ordered with 300kHz driver, NSSW-2x2 is installed on the driver and packed in the enclosure to minimize the drift of CT due to the environment variation.

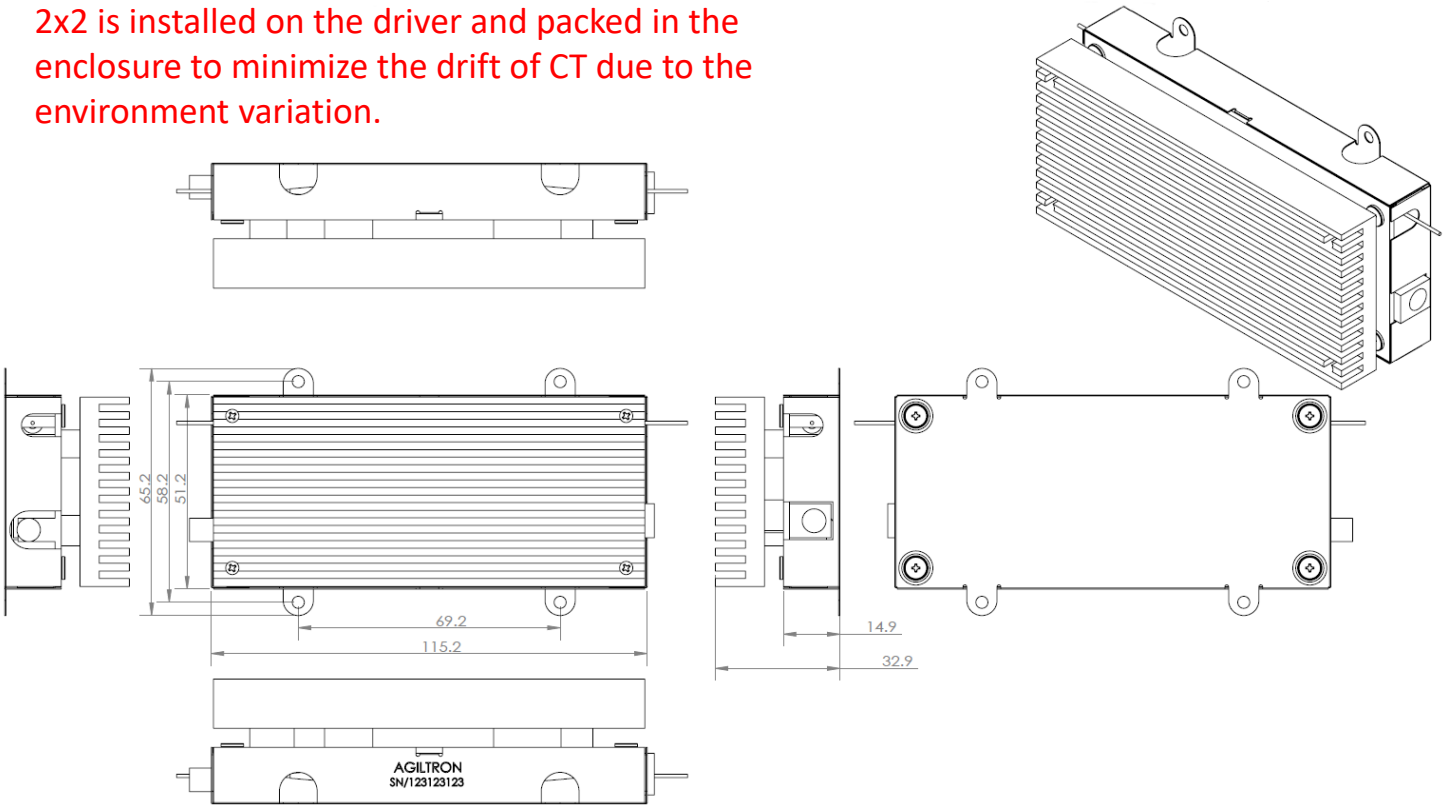

*Product dimensions may change without notice. This is sometimes required for non-standard specifications.

Typical Speed Response Measurement

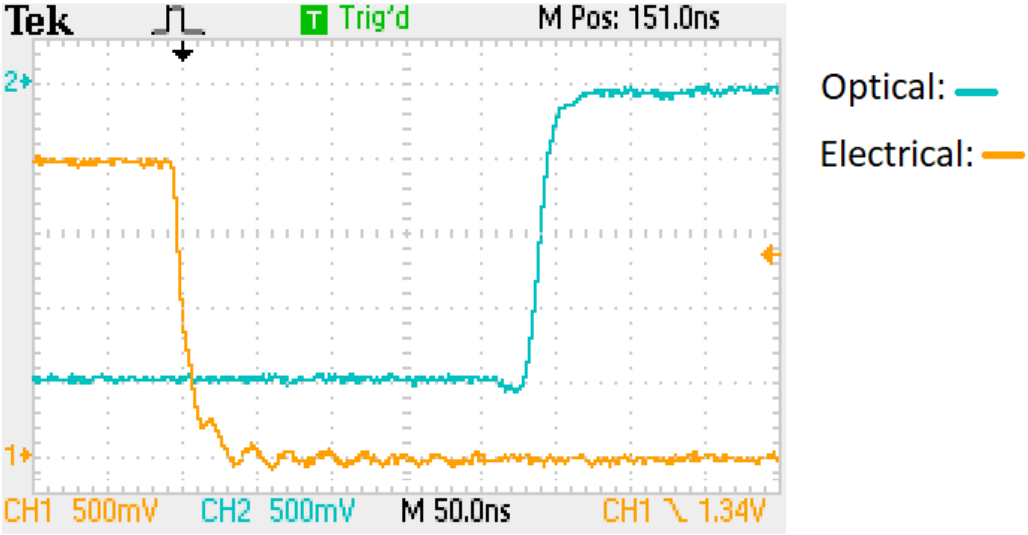

Typical Bandwidth Measurement

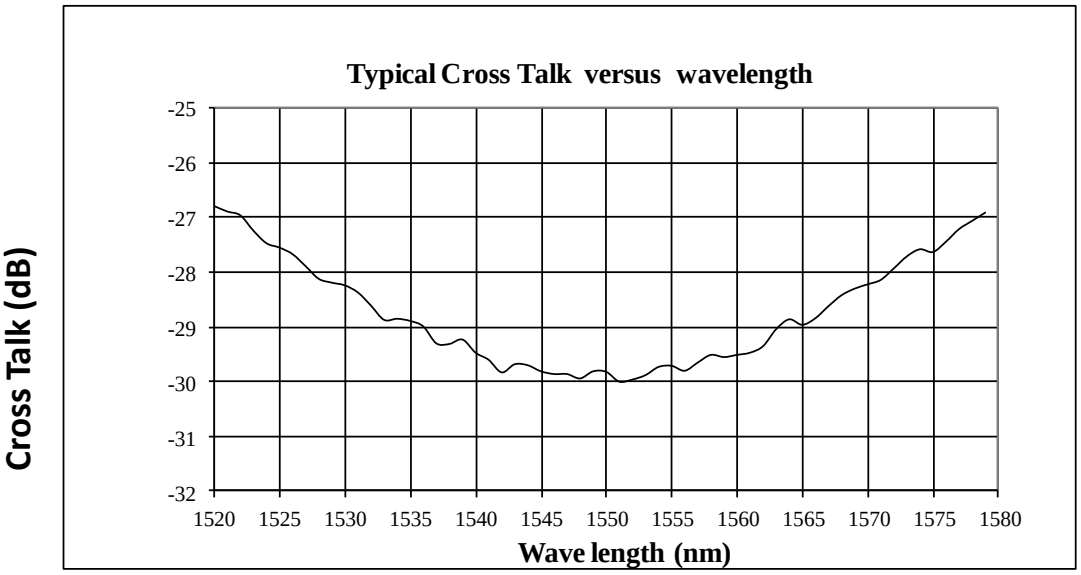

NanoSpeed™ 2X2 Series Fiber Optical Switch

(SM, PM, Bidirectional)

DATASHEET

Ordering Information

	2 2	☐	1	☐	☐	☐	☐	☐
Prefix	**Type**	**Wavelength [1]**	**Configuration**	**Package**	**Fiber Type**	**Fiber Cover**	**Fiber Length**	**Connector**
NSSW- [1] **NHSW-** [2] **NHHW-** [3]	2x2 = 22	1060nm = 1 1310nm = 3 1410nm = 4 1550nm = 5 Special = 0	Single stage = 1	≤ 2W = 1 5W = C 10W = D 20W = E	SMF-28 = 1 HI1060 = 2 PM1550 = 5 PM980 = 9 Special = 0	Bare Fiber = 1 900um Tube = 3 Special = 0	0.25m = 1 0.5m = 2 1.0 m = 3 Special = 0	None = 1 FC/PC = 2 FC/APC = 3 SC/PC = 4 SC/APC = 5 ST/PC = 6 LC/PC = 7 Duplex LC/PC = 8 LC/APC = 9 E2000 APC = A LC/UPC = U Special = 0

[1]. **NSSW** – Normal power (≤ 0.5W) version
[2]. **NHSW** – 2W version @1550nm. The power handling capability may be reduced for wavelength shorter than 1550nm.
[3]. **NHHW** – ≥ 5W version
[4]. For shorter wavelength, please refer to Premium NS switches
[5]. Red-color items may take a long lead time.

NOTE:

- **PM1550** fiber works well for **1310nm**

Fiber Core Alignment
Note that the minimum attenuation for these devices depends on excellent core-to-core alignment when the connectors are mated. This is crucial for shorter wavelengths with smaller fiber core diameters that can increase the loss of many decibels above the specification if they are not perfectly aligned. Different vendors' connectors may not mate well with each other, especially for angled APC.

Fiber Cleanliness
Fibers with smaller core diameters (<5 μm) must be kept extremely clean, contamination at fiber-fiber interfaces, combined with the high optical power density, can lead to significant optical damage. This type of damage usually requires re-polishing or replacement of the connector.

Maximum Optical Input Power
Due to their small fiber core diameters for short wavelength and high photon energies, the damage thresholds for device is substantially reduced than the common 1550nm fiber. To avoid damage to the exposed fiber end faces and internal components, the optical input power should never exceed 20 mW for wavelengths shorter 650nm. We produce a special version to increase the how handling by expanding the core side at the fiber ends.

Q & A

Q: Does NS device drift over time and temperature?
A: NS devices are based on electro-optical crystal materials that can be influenced to a certain range by the environmental variations. The insertion loss of the device is only affected by the thermal expansion induced miss-alignment. For extended temperature operation, we offer special packaging to -40 -100 ^{0}C. The extinction or cross-talk value is affected by many EO material characters, including temperature-dependent birefringence, Vp, temperature gradient, optical power, at resonance points (electronic). However, the devices are designed to meet the minimum extinction/cross-talk stated on the spec sheets. It is important to avoid a temperature gradient along the device length.

Q: What is the actual applying voltage on the device?
A: 100 to 400V depending on the version.

Q: How does the device work?
A: NS devices are not based on Mach-Zander Interference, rather birefringence crystal's nature beam displacement, in which the crystal creates two different paths for beams with different polarization orientations.

Q: What is the limitation for faster operation?
A: NS devices have been tested to have an optical response of about 300 ps. However, practical implementation limits the response speeds. It is possible to achieve a much faster response when operated at partial extinction value. We also offer resonance devices over 20MHz with low electrical power consumption.

Operation Manual

1. Connect a control signal to the SMA connector on the PCB.
2. Attach the accompanied power supply (typically a wall-pluggable unit).
3. The device should then function properly.

Note: Do not alter device factory settings.